Roller couplings for rope drums "AR/J" series

New concept - all steel construction, AR/J couplings are expressely designed to connect low speed shaft of a gearbox with the rope drum of hoisting equipment.

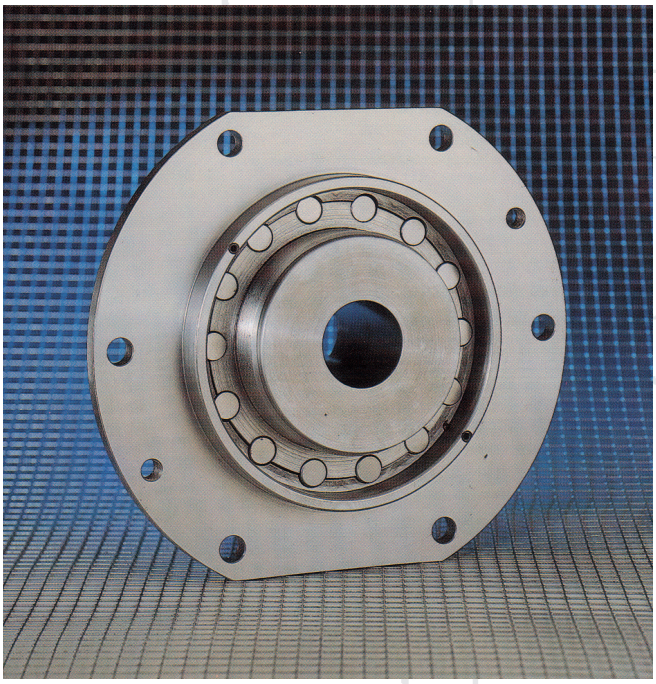

Application of this spherical rollers coupling eliminates all the disadvantages caused by a rigid connection and exclude the need of a third support allowing the possibility to compensate angular and axial misalignments between hub and sleeve (in the order of millimeters in proportion to the size of coupling).

GARJ10.01E

CUSCINETTI VOLVENTI

AR.MEC. s.a.s. di PUDDU CARLO & C. - V.le 1° Maggio, 16 - 20014 NERVIANO (MI) - ITALIA
Tel. +39.0331.415222 - Fax +39.0331.415223 - http://www.armec.it - E-mail: info@armec.it
Sede Legale: Via Po, 41 - 20015 PARABIAGO (MI) - Cod. Fisc. e Part. IVA (VAT) IT 00366390128
R.E.A. Milano n. 887673

Description

Connection between hub and sleeve inside the coupling is performed by spherical rollers assuring angular misalignment and high radial loads proper to the rope drum of crane hoist.
Coupling design let the hub to be axially plugged into the sleeve.
This important feature allow to assemble the hub on the gearbox shaft and to bolt the sleeve directly on the rope drum. Then hub and sleeve can be assembled in their axial working position.
Roller seats inside the sleeve are precision machined and hardened in order to minimize wear.

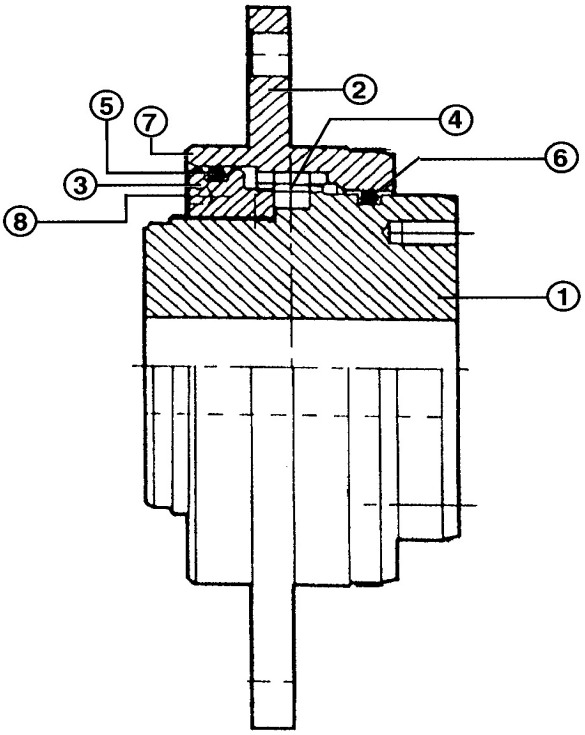

Components list

1. Hub
2. Sleeve
3. Cover
4. Spherical roller
5. O-ring seal
6. O-ring seal
7. Grease connection
8. Axial wear check

Bore machining

Type F1

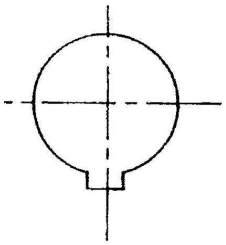

Cylindrical bore tol. H7, keyway tol. Js9 according to UNI 6604-69

Type F2

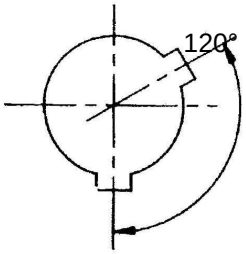

Type S1

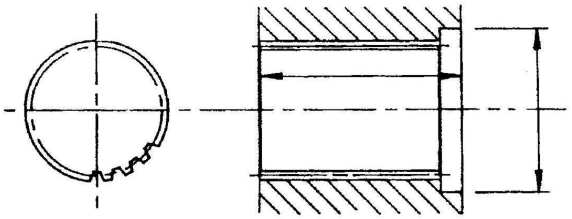

Toothed bore, profile according to DIN 5480 standard

AR.MEC. s.a.s. di PUDDU CARLO & C. - V.le 1° Maggio, 16 - 20014 NERVIANO (MI) - ITALIA
Tel. +39.0331.415222 - Fax +39.0331.415223 - http://www.armec.it - E-mail: info@armec.it
Sede Legale: Via Po, 41 - 20015 PARABIAGO (MI) - Cod. Fisc. e Part. IVA (VAT) IT 00366390128

Coupling selection

Selection of the right size of coupling can be done according to the following procedure:

1) Pre-select the coupling size according to the shaft diameter of gearbox which the coupling hub has to be assembled on (refer to dimensional table, hole maximum allowed).

2) Calculate the real transmissible torque appliable to the coupling with the following formula:
MT max. = P/N x fs x 955 (daNm)
where: **P** = Power (kW)
N = r.p.m. of drum
fs = service factor (see table 1)
955 = fixed coefficient
Check that the resulting torque does not exceed the nominal torque for the pre-selected coupling.

3) Calculate the radial load on the coupling - on the base of rope pull load, rope drum weight and hoisting efficiency - using the following formula:
P = T + G/2 (daN)
where: **P** = radial load (daN)
T = rope pull load (daN)
G = drum force weight (daN)
Check that the resulting radial load does not exceed the maximum acceptable radial load for the pre-selected coupling.

4) Example of coupling selection:

Gearbox shaft diameter	220 mm
Power to transmit	45 kW
R.p.m.	9
Rope pull load	10.000 daN
Drum force weight	1250 daN
Service factor	2 (see table 1)
Torque calculation	MT max. = 45/9x2x955 = 9550 daNm
Radial load calculation	P = 10.000+1300/2 = 10.650 daN

By checking the values obtained with the values stated in the table no. 2 it results that the right coupling for the application is type AR 450/J.

Table no.1 - Service factor "fs" according to standard

According to	DIN 15020	IBm	Iam	2m	3m	4m	5m				
According to	FEM	T0	T1	T2	T3	T4	T5	T6	T7	T8	T9
Service factor		1.12	1.25	1.4	1.6	1.8	2	2.25	2.5	2.75	3

Table no.2 - Coupling selection

AR.../J coupling		140	160	180	200	220	240	260	280	310	340	400	420	450	530	560	600	670	730
Bore d mm	pilot	30	30	30	50	50	60	60	60	70	70	90	90	100	100	120	120	140	140
	max	65	80	85	95	105	115	130	140	160	175	210	220	235	290	310	330	375	410
Mass	kg	10	12	20	24	28	32	40	55	72	94	130	160	200	300	370	415	600	700
Nom. Torque	daNm	250	400	780	1350	1600	1850	2200	3200	4000	5100	7700	9200	13000	19000	31000	42000	54000	75000
Radial load	daN	1200	1400	1800	2500	3100	3700	4200	5200	6300	7950	11250	12300	14500	20200	22200	26000	32300	39000

AR.MEC. s.a.s. di PUDDU CARLO & C. - V.le 1° Maggio, 16 - 20014 NERVIANO (MI) - ITALIA
Tel. +39.0331.415222 - Fax +39.0331.415223 - http://www.armec.it - E-mail: info@armec.it
Sede Legale: Via Po, 41 - 20015 PARABIAGO (MI) - Cod. Fisc. e Part. IVA (VAT) IT 00366390128

Assembly instructions

AR.../J couplings are supplied without lubricant and are protected against corrosion with a special film.
Assembly does not require any special tools and it is not necessary to remove the rollers.
The fitting of the hub on the gearbox shaft must be done with a slight interference (bore tol. H7, shaft tol. n6).

Proceed as follows:

1) Remove sealing rings from the hub.

2) Heat the hub in oil bath at 120℃ (248℉) temperature without exceeding 130-135℃ (266-275℉).

3) Install hub on the shaft checking that no sharp edges are present on the key; dimensions of the key should be compatible with the keyway of the hub.

Assembly scheme

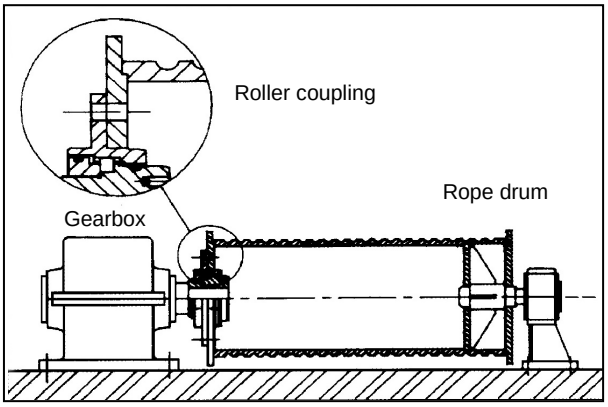

Misalignment

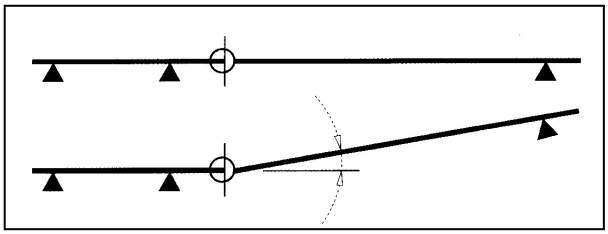

Maintenance and lubrication instructions

1) Replace grease lubricant completely every 6000 hours of operation, carefully cleaning the coupling and checking the wear of roller seats.

2) Use EP grease with lithium additives for ambient temperatures between -10℃ (14℉) and 90℃ (194℉).
The following selection of lubricant may be used for all standard applications:

AGIP GR-MU/EPO (EP1)
IP ATHESIA EPO
MOBILGREASE SPECIAL
ESSO PEN-O-LED EP 360
SHELL ALVANIA EP GREASE I
API GREASE PGX-O

3) Fill the coupling with grease every 6 months if required.

AR.MEC. s.a.s. di PUDDU CARLO & C. - V.le 1° Maggio, 16 - 20014 NERVIANO (MI) - ITALIA
Tel. +39.0331.415222 - Fax +39.0331.415223 - http://www.armec.it - E-mail: info@armec.it
Sede Legale: Via Po, 41 - 20015 PARABIAGO (MI) - Cod. Fisc. e Part. IVA (VAT) IT 00366390128

Dimensional table

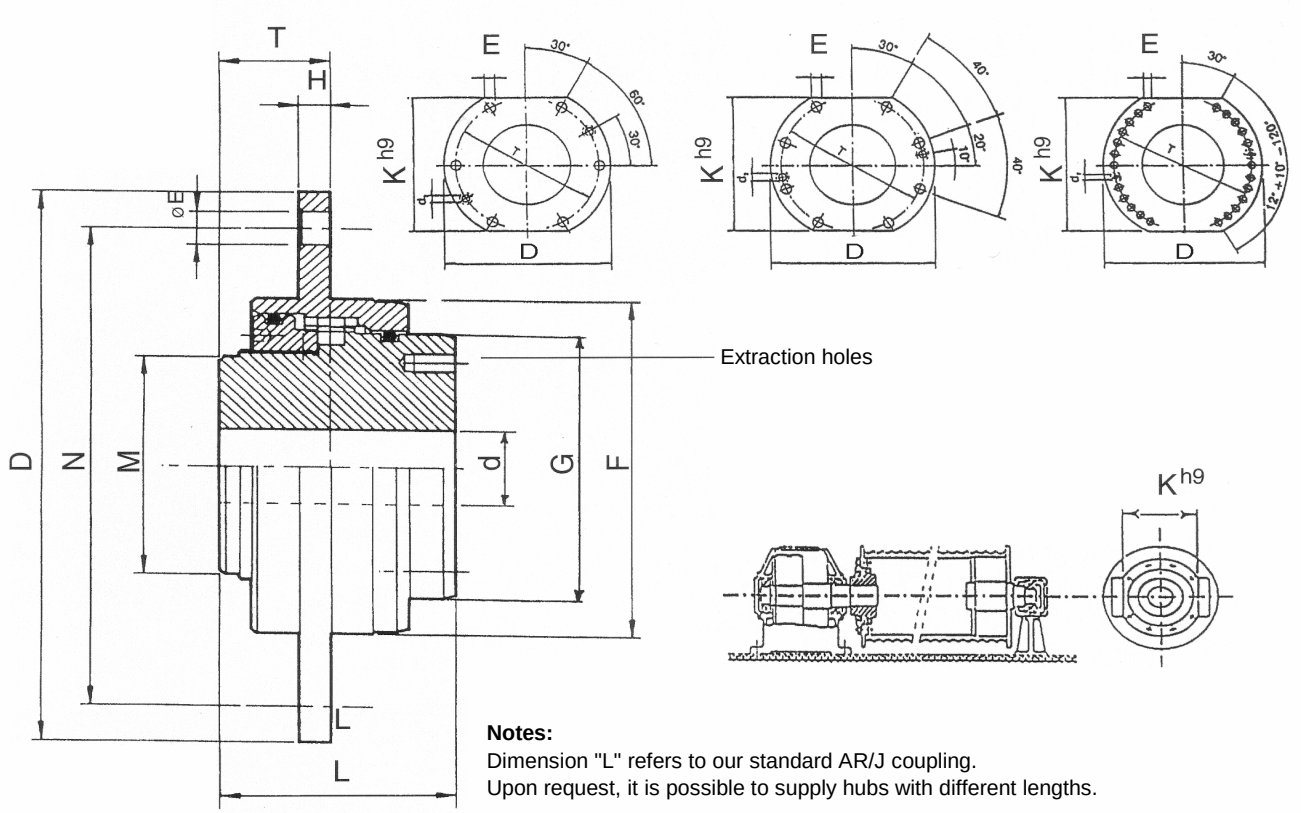

Notes:
Dimension "L" refers to our standard AR/J coupling.
Upon request, it is possible to supply hubs with different lengths.

AR.../J coupling		140	160	180	200	220	240	260	280	310	340	400	420	450	530	560	600	670	730
Bored mm	pilot	30	30	30	50	50	60	60	60	70	70	90	90	100	100	120	120	140	140
	max	65	80	85	95	105	115	130	140	160	175	210	220	235	290	310	330	375	410
Dimens. mm	D	230	250	280	320	340	360	380	400	420	450	510	550	580	650	680	710	780	850
	M	90	110	120	135	145	163	183	195	225	255	310	325	350	425	455	490	555	615
	F h6	140	160	180	200	220	240	260	280	310	340	400	420	450	530	560	600	670	730
	T	42	42	42	45	45	45	45	45	45	60	60	60	60	65	65	81	81	81
	L	90	95	100	110	125	130	145	170	175	185	220	240	260	315	350	380	410	450
	H	12	12	12	15	15	15	15	15	15	20	20	20	20	25	25	25	25	25
	N	200	220	250	280	300	320	340	360	380	400	460	500	530	600	630	660	730	800
	G	110	130	142	157	175	195	215	231	261	286	346	361	386	461	491	526	591	651
	Ø E H8	14	14	14	18	18	18	18	18	18	24	24	24	24	24	24	28	28	28
	No. Holes	6	6	6	6	6	6	6	6	6	6	6	6	8	8	24	24	24	24
	K h9	200	220	250	280	300	320	340	360	380	400	460	500	530	580	600	640	700	760
Mass Kg		13	16	24	29	35	42	54	67	90	108	150	190	230	395	460	520	740	890
Nom. Torque max		250	400	780	1350	1600	1850	2200	3200	4000	5100	7700	9200	13000	19000	31000	42000	54000	75000
Radial load		1200	1400	1800	2500	3100	3700	4200	5200	6300	7950	11250	12300	14500	20200	25000	30000	34000	39000

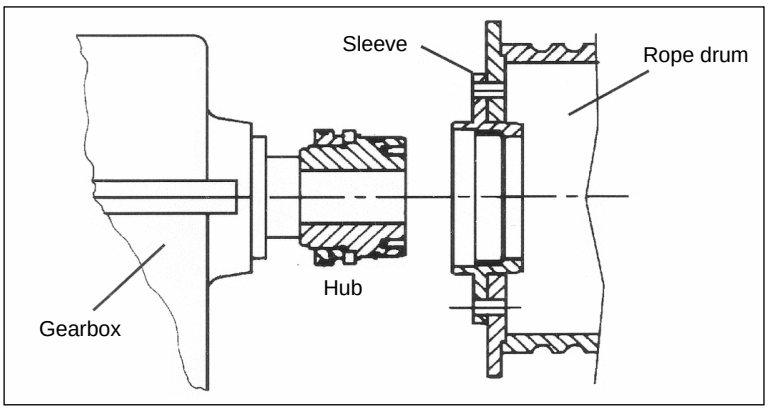

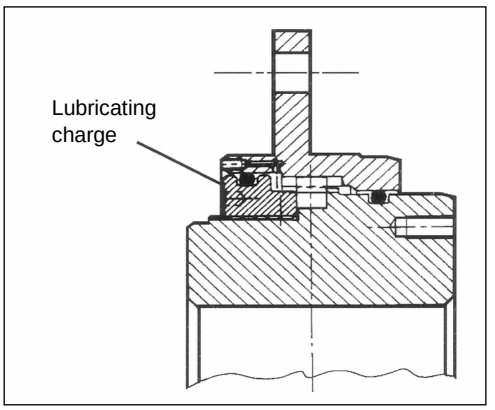

AR.MEC. s.a.s. di PUDDU CARLO & C. - V.le 1° Maggio, 16 - 20014 NERVIANO (MI) - ITALIA
Tel. +39.0331.415222 - Fax +39.0331.415223 - http://www.armec.it - E-mail: info@armec.it
Sede Legale: Via Po, 41 - 20015 PARABIAGO (MI) - Cod. Fisc. e Part. IVA (VAT) IT 00366390128